Limit Switch

ZLN15G Series

Part Number Description

ZLN15G ❶

❶ **Head Type**	10 : Short Long Push Plunger	010 : Push Plunger		
	03 : Long Push Plunger	030 : Roller Plunger	031 : Cross Roller Plunger	
	05 : Hinge Short Lever	06 : Hinge Lever	07 : Roller Lever	09 : Roller Short Lever

General Specification

Contact Form		1C
Contact Material		Ag alloy
Contact & Contact Distance		0.5mm
Insulation Resistance		Max. 100MΩ 500VDC
Contact Resistance		Min. 50mΩ
Operation Speed		0.01mm/sec ~ 0.5m/sec
Allowed operation frequency	**Electrical**	Max. 20 Min.
	Mechanical	Max. 120 Min.
Dielectric Strength	**Between the terminals of the same polarity**	1,000VAC 1Min.
	Between each terminal and non-charging metal parts	2,000VAC 1Min.
Life Cycle	**Electrical**	Min. 500,000
	Mechanical	Min. 1,000,000
Vibration Resistance	**Malfunctional**	10 ~ 55Hz Durable amplitude 1.5mm
Shock Resistance	**Destruction**	Max. 100G
	Malfunctional	Max. 30G
Ambient Temperature		-10 ~ +80˚C (with no icing)
Ambient Humidity		35% ~ 85% RH
Tightening Torque		1.2N·m (12.25kgf·cm)
Maximum Inrush Current		Norminal Open(NO) 15A Norminal Close(NC) 30A

		Non-Inductive			Inductive		
			Lamp Load			Motor Load	
	Voltage	**Resistance Load**	**Norminal Open NO**	**Norminal Close NC**	**Inductive Load**	**Norminal Open NO**	**Norminal Close NC**
Contact Ratings	125VAC	15A	1.5A	3A	15A	2.5A	5A
	250VAC	10A	1.25A	2.5A	10A	1.5A	3A
	500VAC	10A	0.75A	1.0A	6A	0.75A	1.5A
	8VDC	15A	1.5A	3A	15A	2.5A	5A
	14VDC	15A	1.5A	3A	10A	2.5A	5A
	30VDC	6A	1.5A	3A	5A	2.5A	5A
	125VDC	0.5A	0.5A	0.5A	0.05A	0.05A	0.05A
	250VDC	0.25A	0.25A	0.25A	0.03A	0.03A	0.03A

Product Selection

	Part Number	Contact	Head Type	OF	RF	PT	MD	OT	TT
	ZLN15G10	1C	Short Long Push Plunger	600g	100g	2.0mm	0.8mm	0.5mm	-
	ZLN15G010	1C	Push Plunger	600g	100g	2.0mm	0.8mm	0.5mm	-
	ZLN15G03	1C	Long Push Plunger	600g	100g	2.0mm	0.8mm	6.0mm	8.0mm
	ZLN15G030	1C	Roller Plunger	600g	100g	2.0mm	0.8mm	6.0mm	8.0mm
	ZLN15G031	1C	Cross Roller Plunger	600g	100g	2.0mm	0.8mm	6.0mm	8.0mm

Limit Switch

ZLN15G Series

Product Selection

	Part Number	Contact	Head Type	OF	RF	PT	MD	OT	TT
	ZLN15G05	1N/O+1N/C	Hinge Short Lever	150g	40g	13.5mm	3.2mm	4.0mm	17.5mm
	ZLN15G06	1N/O+1N/C	Hinge Lever	150g	40g	13.5mm	3.2mm	4.0mm	17.5mm
	ZLN15G07	1N/O+1N/C	Roller Lever	180g	50g	11.0mm	2.4mm	3.0mm	8.5mm
	ZLN15G09	1N/O+1N/C	Roller Short Lever	240g	80g	6.5mm	1.5mm	2.0mm	8.5mm

Dimension

unit : mm

ZLN15G10

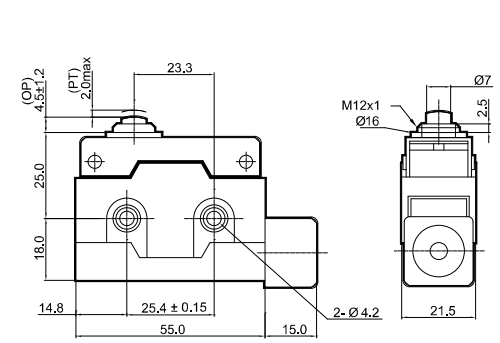

ZLN15G010

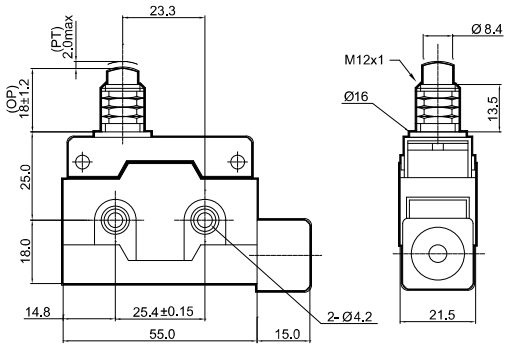

ZLN15G03

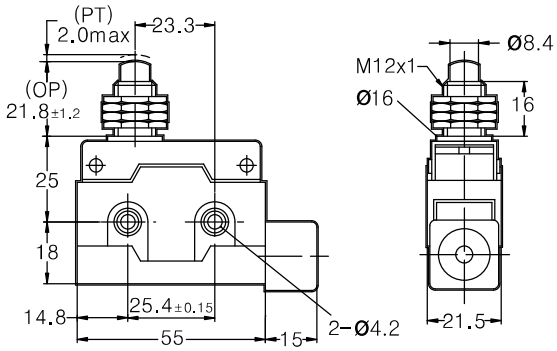

ZLN15G030

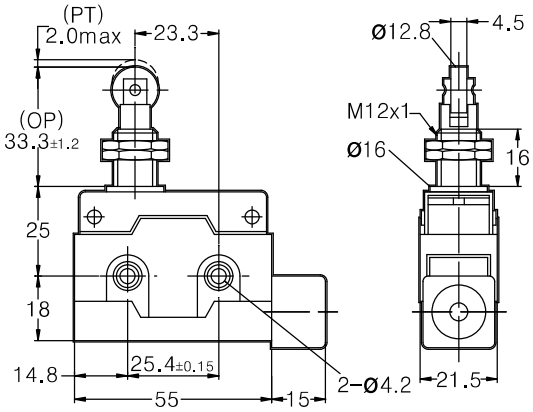

ZLN15G031

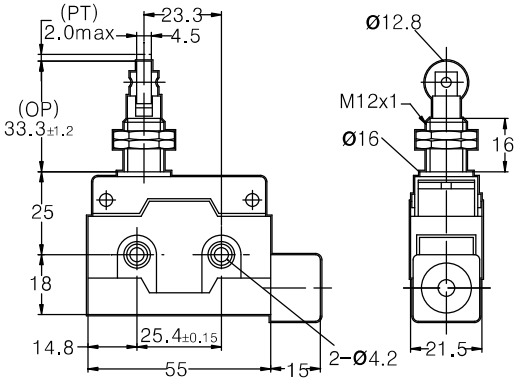

Limit Switch

ZLN15G Series

Dimension

unit : mm

ZLN15G05

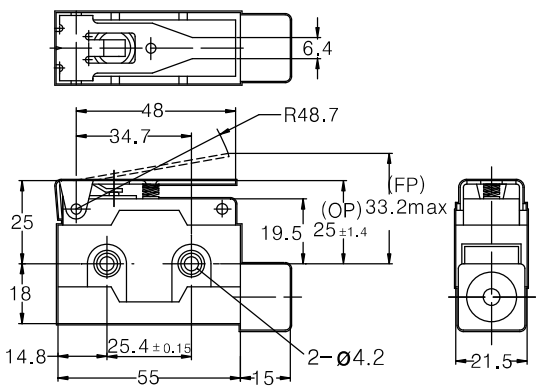

ZLN15G06

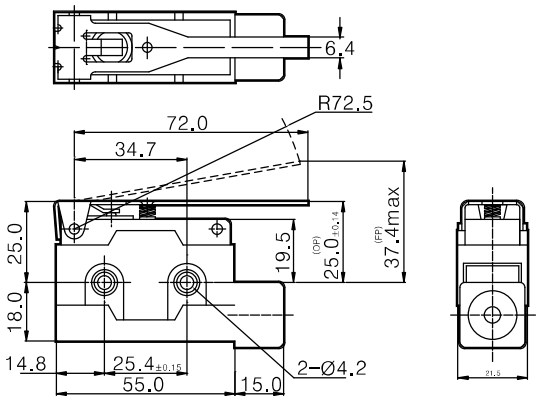

ZLN15G07

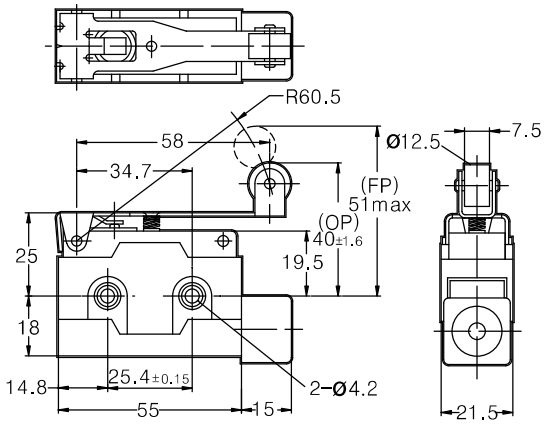

ZLN15G09

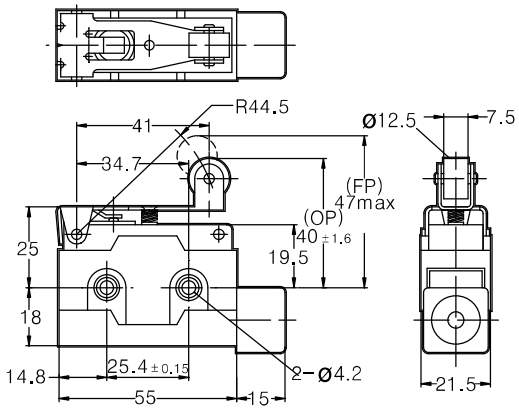

Circuit Drawing

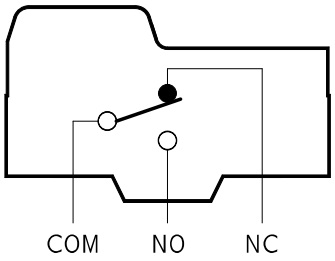

COM : Common Terminal
NO : Always Open Terminal
NC : Always Closed Terminal

Attachment Hole Processing Drawing

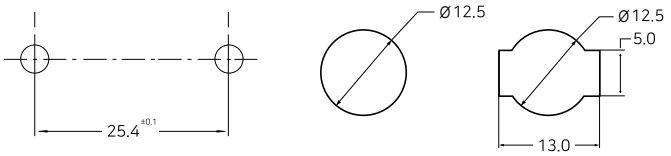

Wiring method

1. Use a (-) driver to remove the cover.
2. Pass the wire through the rubber packing on the terminal cover.
3. Connect the lead wire to the terminal.
4. Restore the terminal cover.

Precautions

- Drill drainage holes if water or oil may flow in the switch.
- Avoid strong acid, alkali and high temperature.

※ Specifications and materials may change without prior notice to improve the product quality.

Glossary

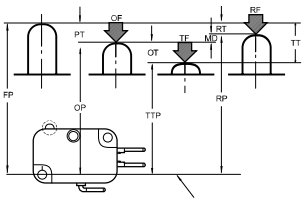

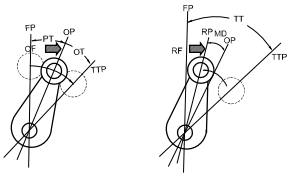

Operating characteristics	Category	Abbr.	Term	Unit	Definition
	Force	Force required for operation	OF	g, kg g-mm	Force on the actuator required for the motion from the free position to the operating position
		Restoring force	RF	g, kg g-mm	Force on the actuator required for the motion from the operating limit position to the restoring position
		Force required for entire motion	TF	g, kg g-mm	Force on the actuator required for the motion from the operating position to the operating limit position
	Motion	Motion to the operating position	PT	mm, deg	Distance or angle from the free position of the actuator to the operating position
		Motion after operation	OT	mm, deg	Distance or angle from the operating position of the actuator to the operating limit position
		Hysteresis distance	MD	mm, deg	Distance or angle from the operating position of the actuator to the restoring position
		Total motion	TT	mm, deg	Distance or angle from the free position of the actuator to the operating limit position
	Position	Free position	FP	mm, deg	The position of the operating part when no force is applied from outside
		Operating position	OP	mm, deg	The position of the actuator when the external force is applied to the actuator and the moving contact reverses from the free position
		Restoring position	RP	mm, deg	The position of the actuator when the external force to the actuator is reduced and the moving contact reverses from the operating position to the free position
		Operating limit position	TTP	mm, deg	The position of the actuator when the actuator reaches the actuator stop position